Connectivity

SNIA | SFF

Update Project Proposal: SFF-TA-1016 Internal Unshielded High Speed Connector System

Presented: 2025-10-03

Presenter: Zhineng Fan [Amphenol]

Supporters: Feng Pan [FIT], Mohiuddin Mazumder [Intel], Howard Andrews [Lotes], Dan Gorenc [TE Connectivity]

Update Project Proposal: SFF-TA-1016 Internal Unshielded High Speed Connector System

- Modification proposals
  - Add wording to clarify the plug card type
  - Add two more latch holes in receptacle connector and modify plug latch
  - Reduce signal gold finger length
- Editor(s): Zhineng Fan
- Supporters: Minimum 3 member companies required (can include editor's company)
  1. Amphenol
  2. FIT
  3. Intel
  4. Lotes
  5. TE Connectivity

 © 2025 SNIA. All Rights Reserved.

SNIA | SFF

Clarify Plug Type

- Add the following words in section 4.1 Configuration Overview/Descriptions

"…The plug (commonly refer as card, paddle card, or edge card) can be made of either PCB or lead frame. "

 © 2025 SNIA. All Rights Reserved.

SNIA | SFF

Add Receptacle Latch Holes

- Update to 38P/74P receptacle

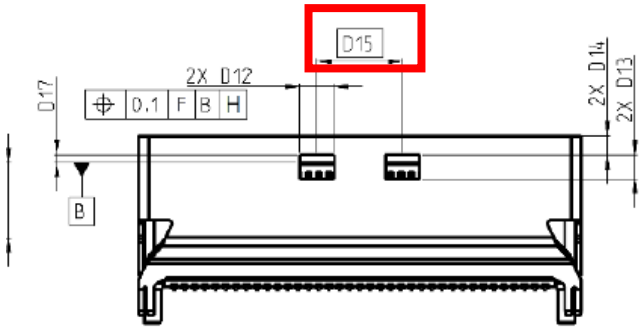

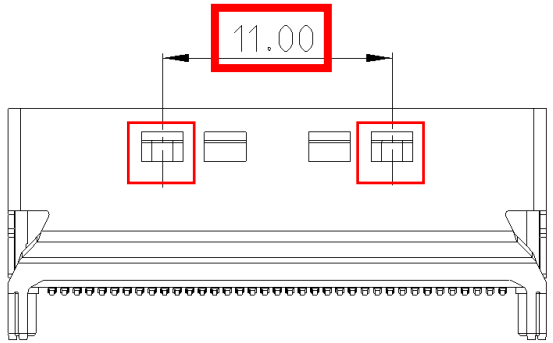

Designator	Description	Dimension (mm)	Tolerance
A15	Latch Slot Spacing	5.00	Basic
B15	Latch Slot Spacing	5.00	Basic
C15	Latch Slot Spacing	5.00	Basic
D15	Latch Slot Spacing	5.00	Basic

Designator	Description	Dimension (mm)	Tolerance
A15	Inner latch Slot Spacing	5.00	Basic
A31	Outer latch Slot Spacing	11.00	Basic
B15	Inner latch Slot Spacing	5.00	Basic
B32	Outer latch Slot Spacing	11.00	Basic
C15	Inner latch Slot Spacing	5.00	Basic
C31	Outer latch Slot Spacing	11.00	Basic
D15	Inner latch Slot Spacing	5.00	Basic
D32	Outer latch Slot Spacing	11.00	Basic

 © 2025 SNIA. All Rights Reserved.

Add Receptacle Latch Holes

- Update to 124P/148P receptacle

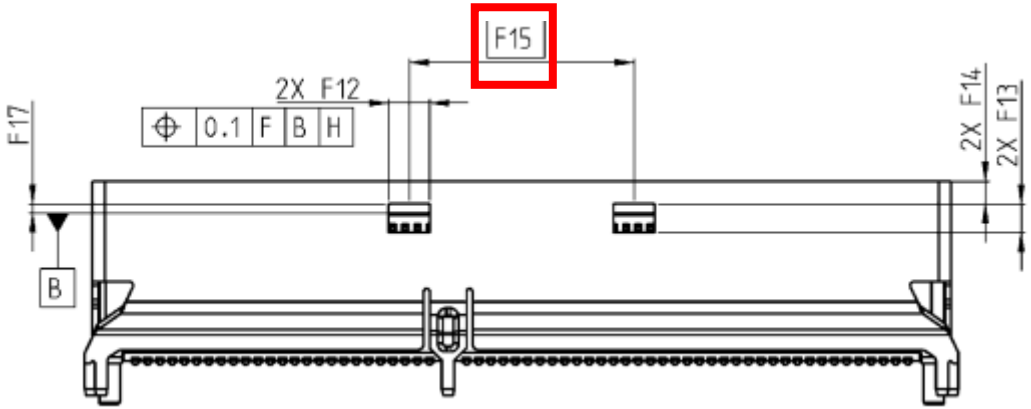

Designator	Description	Dimension (mm)	Tolerance
E15	Latch Slot Spacing	11.00	Basic
F15	Latch Slot Spacing	11.00	Basic
G15	Latch Slot Spacing	11.00	Basic
H15	Latch Slot Spacing	11.00	Basic

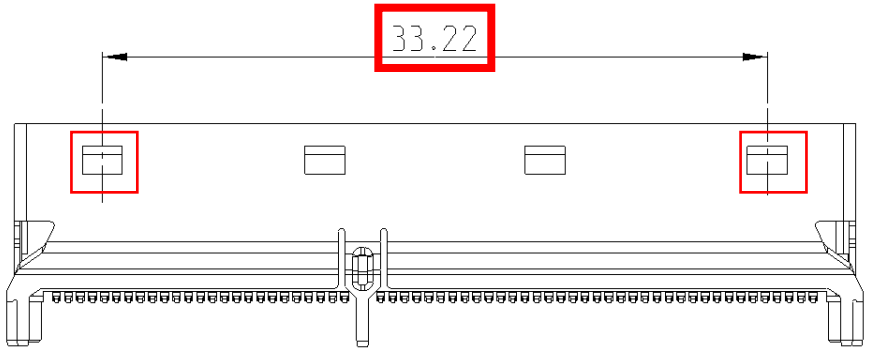

Designator	Description	Dimension (mm)	Tolerance
E15	Inner latch Slot Spacing	11.00	Basic
E32	Outer latch Slot Spacing	33.22	Basic
F15	Inner latch Slot Spacing	11.00	Basic
F35	Outer latch Slot Spacing	33.22	Basic
G15	Inner latch Slot Spacing	11.00	Basic
G32	Outer latch Slot Spacing	33.22	Basic
H15	Inner latch Slot Spacing	11.00	Basic
H35	Outer latch Slot Spacing	33.22	Basic

 © 2025 SNIA. All Rights Reserved.

Modify Plug Latch Distance

- Modify 38P/74P plug

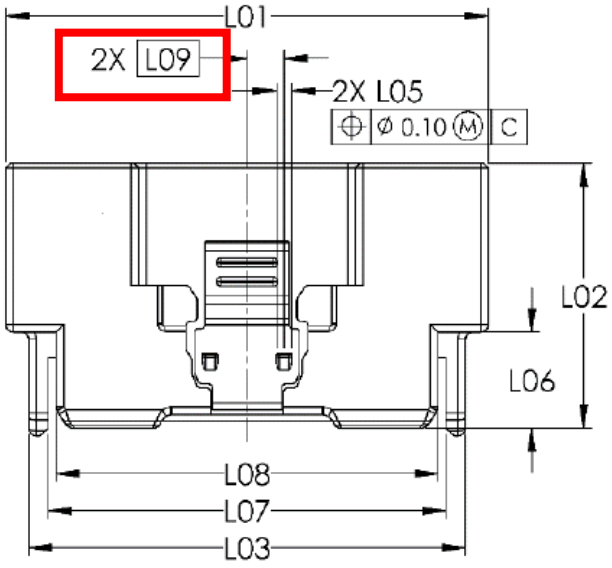

Designator	Description	Dimension (mm)	Tolerance
J09	Datum C (Interface Centerline) to Latch Tab Center	2.42	Basic
L09	Datum C (Interface Centerline) to Latch Tab Center	2.42	Basic

Designator	Description	Dimension (mm)	Tolerance
J09	Datum C (Interface Centerline) to Latch Tab Center	5.50	Basic
L09	Datum C (Interface Centerline) to Latch Tab Center	5.50	Basic

 © 2025 SNIA. All Rights Reserved.

Modify Plug Latch Distance

- Modify 124P/148P plug

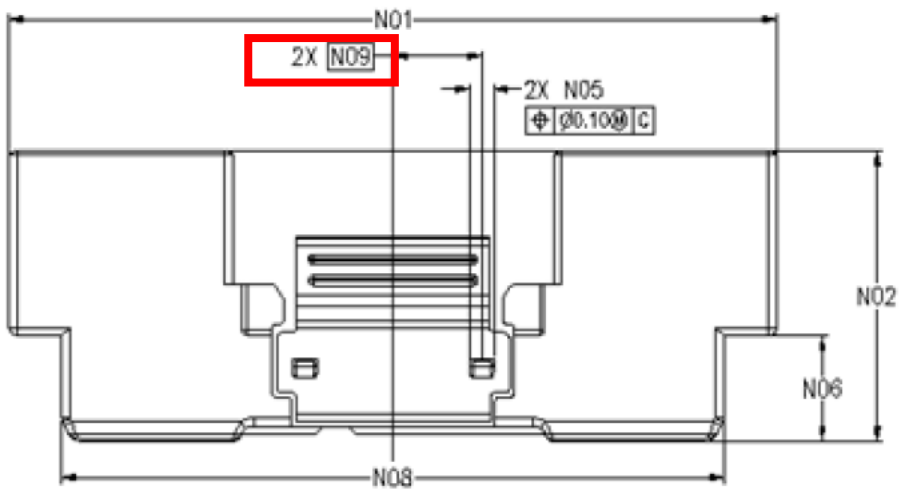

Designator	Description	Dimension (mm)	Tolerance
N09	Datum C (Interface Centerline) to Latch Tab Center	5.50	Basic
Q09	Datum C (Interface Centerline) to Latch Tab Center	5.50	Basic

Designator	Description	Dimension (mm)	Tolerance
N09	Datum C (Interface Centerline) to Latch Tab Center	16.61	Basic
Q09	Datum C (Interface Centerline) to Latch Tab Center	16.61	Basic

 © 2025 SNIA. All Rights Reserved.

Modify Signal Gold Finger Length

- Modify signal gold finger length for all pin counts

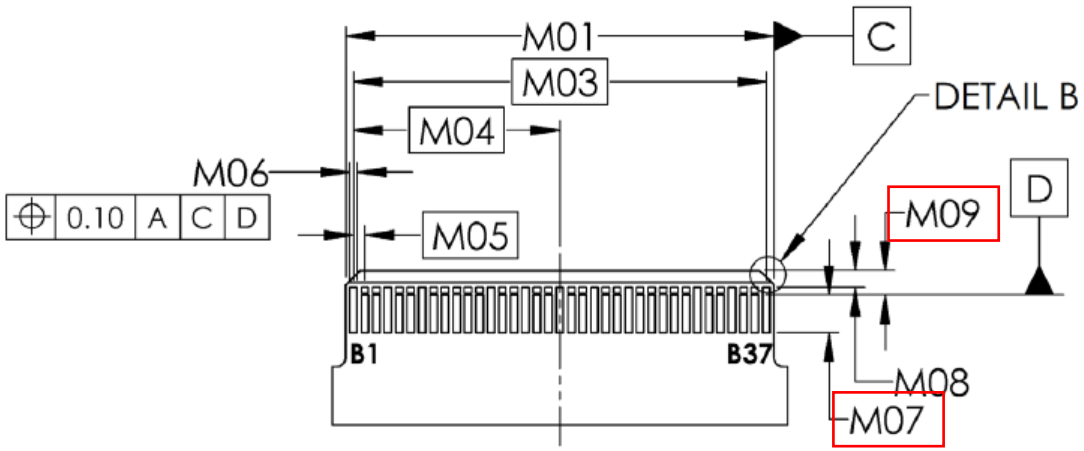

Designator	Description	Dimension (mm)	Tolerance
K09	Second-mate Pad to Card Edge	1.28	+/-0.1
K07	Pad Length – Second-mate	1.97	MIN
M09	Second-mate Pad to Card Edge	1.28	+/-0.1
M07	Pad Length – Second-mate	1.97	MIN
P09	Second-mate Pad to Card Edge	1.28	+/-0.1
P07	Pad Length – Second-mate	1.97	MIN
R09	Second-mate Pad to Card Edge	1.28	+/-0.1
R07	Pad Length – Second-mate	1.97	MIN

Designator	Description	Dimension (mm)	Tolerance
K09	Second-mate Pad to Card Edge	1.58	+/-0.1
K07	Pad Length – Second-mate	1.67	MIN
M09	Second-mate Pad to Card Edge	1.58	+/-0.1
M07	Pad Length – Second-mate	1.67	MIN
P09	Second-mate Pad to Card Edge	1.58	+/-0.1
P07	Pad Length – Second-mate	1.67	MIN
R09	Second-mate Pad to Card Edge	1.58	+/-0.1
R07	Pad Length – Second-mate	1.67	MIN

 © 2025 SNIA. All Rights Reserved.

Thank You

SNIA SFF Chair Contact: sff-chair@snia.org

SNIA SFF URL: https://www.snia.org/sff

 © 2025 SNIA. All Rights Reserved.

SNIA | SFF