SFF-TA-1007

Specification for

Enterprise and Datacenter 1U Long Device Form Factor (E1.L)

Rev 1.3 September 2, 2025

SECRETARIAT: SFF TWG

This specification is made available for public review at https://www.snia.org/sff/specifications. Comments may be submitted at https://www.snia.org/feedback. Comments received will be considered for inclusion in future revisions of this specification.

This document has been released by SNIA. The SFF TWG believes that the ideas, methodologies, and technologies described in this document are technically accurate and are appropriate for widespread distribution.

The description in this specification does not assure that the specific component is available from suppliers. If such a component is supplied, it should comply with this specification to achieve interoperability between suppliers.

ABSTRACT: This specification defines the mechanical attributes of a 1U long form factor with multiple thicknesses for a device that will fit in vertically in a standard 1U rack mounted host systems designed to support this new form factor.

This specification provides a common reference for host systems manufacturers, host system integrators, and device suppliers. This specification originates from Enterprise and Datacenter SSD Form Factor Working Group (EDSFF). Based on non-SSD devices also using EDSFF and agreement from the EDSFF Working Group, the SFF TWG agreed changing EDSFF to Enterprise and Datacenter Standard Form Factor.

POINTS OF CONTACT:
SNIA Technical Council Administrator
Email: TCAdmin@snia.org

Chairman SFF TWG
Email: SFF-Chair@snia.org

EDITORS:
Anthony Constantine, Micron Technology

Copyright © 2025 SNIA. All rights reserved.

Intellectual Property
The user's attention is called to the possibility that implementation of this specification may require the use of an invention covered by patent rights. By distribution of this specification, no position is taken with respect to the validity of a claim or claims or of any patent rights in connection therewith.

This specification is covered by the SNIA IP Policy and as a result goes through a request for disclosure when it is published.

Additional information can be found at the following locations:

- Results of IP Disclosures: https://www.snia.org/sffdisclosures
- SNIA IP Policy: https://www.snia.org/about/corporate_info/ippolicy

Copyright
SNIA hereby grants permission for individuals to use this document for personal use only, and for corporations and other business entities to use this document for internal use only (including internal copying, distribution, and display) provided that:

1. Any text, diagram, chart, table or definition reproduced shall be reproduced in its entirety with no alteration, and,
2. Any document, printed or electronic, in which material from this document (or any portion hereof) is reproduced shall acknowledge the SNIA copyright on that material, and shall credit SNIA for granting permission for its reuse.

Other than as explicitly provided above, there may be no commercial use of this document, or sale of any part, or this entire document, or distribution of this document to third parties. All rights not explicitly granted are expressly reserved to SNIA.

Permission to use this document for purposes other than those enumerated (Exception) above may be requested by e-mailing copyright_request@snia.org. Please include the identity of the requesting individual and/or company and a brief description of the purpose, nature, and scope of the requested use. Permission for the Exception shall not be unreasonably withheld. It can be assumed permission is granted if the Exception request is not acknowledged within ten (10) business days of SNIA's receipt. Any denial of permission for the Exception shall include an explanation of such refusal.

Disclaimer
The information contained in this publication is subject to change without notice. SNIA makes no warranty of any kind with regard to this specification, including, but not limited to, the implied warranties of merchantability and fitness for a particular purpose. SNIA shall not be liable for errors contained herein or for incidental or consequential damages in connection with the furnishing, performance, or use of this specification.

Suggestions for revisions should be directed to https://www.snia.org/feedback/.

Copyright © 2025 SNIA. All rights reserved.

Foreword

The development work on this specification was done by the SNIA SFF TWG, an industry group. Since its formation as the SFF Committee in August 1990, as well as since SFF's transition to SNIA in 2016, the membership has included a mix of companies which are leaders across the industry.

For those who wish to participate in the activities of the SFF TWG, the signup for membership can be found at https://www.snia.org/join.

Revision History

Rev 1.0 *February 02, 2018:*
-Initial release

Rev 1.1 *March 11, 2018*:
-Converted to the new SFF document template
-Added new name (E1.L).
-Clarified abstract.
-Updated foreword per current policy.
-Section 2.3: Corrected ASME reference for consistency.
-Section 2.4: Reordered definitions alphabetically.
-Section 3: Clarified latch/front plate may add additional length.
-Section 4: Added clarification to label placement in presence of fins.
-Section 4: Added statement that Device requires LED isolation from LED bleeding.
-Figure 4-1: Datum F placement corrected along with measurement (no change to table).
-Figure 4-4: Added label area to top of device.
-Table 4-1: Modified Dimensions A7 and C4.-Section 5, 7: Clarified power is a recommendation.
-Section 5: Reworded light bleeding portion.
-Table 5-1: Modified nominal dimensions for C3 due to reference change to Datum W.
-Table 5-1: Modified nominal dimensions of A7, C4, D4.
-Table 5-1: Modified tolerances of A5, A7, C2, C4, C9.
-Table 5-1: Modified comment for C4.
-Section 5-2: Added Datum W to figures.
-Section 7.1: Editorial change to description.

Rev 1.2 *July 9, 2021*:
-Editorial changes to match the latest SFF document template.
-Changed SSD to device and abstract edit to reflect EDSFF name change.
-Section 5: Removal of Power references apart from section 5.1 recommendations.
-Section 5: Moved the power references in section 5.1 to an informative table.
-Section 5.1: Added statement allowing security labels to be placed anywhere on the enclosure.
-Section 5.1: Clarification that both 1C and 2C card edges are allowed.
-Section 5.2: Datum name change from "Y" to "G" to align with SFF-TA-1002 Datum.
-Section 5.2: Note added for recommended ground contact.
-Section 5: Moved the power references in section 5.1 to an informative table.
-Section 5.1: Added statement allowing security labels to be placed anywhere on the enclosure.
-Section 7: Deleted informative thermal guidance. Replaced with power and thermal requirements.

Rev 1.3 *September 2, 2025*:
-Changes to align with boiler plate.
-Section 7: Added additional description and context to Table 7-1 and removed Table 7-2.
-Editorial throughout

Copyright © 2025 SNIA. All rights reserved.

Contents

1. Scope 5
1.1 Application Specific Criteria 5

2. References and Conventions 5
2.1 Industry Documents 5
2.2 Sources 5
2.3 Conventions 6

3. Keywords, Acronyms, and Definitions 7
3.1 Keywords 7
3.2 Acronyms and Abbreviations 7
3.3 Definitions 8

4. General Description 9
4.1 Configuration Overview/Descriptions 9

5. Mechanical Specification 10
5.1 Overview 10
5.2 Physical Definition: 1U Long Form Factor 10
5.2.1 1U Long Form Factor 13

6. Informative: SFF-TA-1002 edge (plug) Mechanical drawing 14
6.1 Overview 14

7. E1.L Power/Thermal Requirements 15
7.1 Power 15
7.2 Thermals 15
7.3 Informative: Maximum Sustained Device Power 15

Figures

Figure 4-1. Example system implementation of 1U long form factor. 9
Figure 5-1. Primary Side of 1U long 10
Figure 5-2. Bottom side of 1U long 10
Figure 5-3. Secondary Side of 1U long and latch section 11
Figure 5-4. Top side of 1U long 11
Figure 5-5. Back of 1U long (connector facing) of 9.5mm device 11
Figure 5-6. Back of 1U long (connector facing) of 18mm device 12
Figure 6-1. 1C (x4) Mating Card Dimensions 14
Figure 6-2. 2C (x8) Mating Card Dimensions 14

Tables

Table 5-1. 1U Long Form Factor Dimensions 13
Table 7-1. Power Requirements for a 1U long (E1.L) system implementation 15

Copyright © 2025 SNIA. All rights reserved.

1. Scope

This specification defines the mechanical attributes of a new form factor for a device that will fit in 1U rack mounted host systems designed to support this form factor.

1.1 Application Specific Criteria

This 1U long form factor provides external dimensions, card edge placement, mounting holes for the front panel and latch, and LED placement to assist host system manufacturers in integration of this form factor.

The environment for the 1U long form factor is an enclosure connecting one or more devices in a dedicated packaging environment.

2. References and Conventions

2.1 Industry Documents

The following documents are relevant to this specification:

- ASME Y14.5-2009 Dimensioning and Tolerancing published by ASME at https://www.asme.org
- SNIA SFF-TA-1002 Protocol Agnostic Multi-Lane High Speed Connector specification
- SNIA SFF-TA-1009 Enterprise and Datacenter Standard Form Factor Pin and Signal Specification
- SNIA SFF-TA-1023 Thermal Characterization Specification for EDSFF Devices

2.2 Sources

The complete list of SFF documents which have been published, are currently being worked on, or that have been expired by the SFF Committee can be found at https://www.snia.org/sff/specifications. Suggestions for improvement of this specification are welcome and should be submitted to https://www.snia.org/feedback.

Other standards may be obtained from the organizations listed below:

Standard	Organization	Website
ASME	American Society of Mechanical Engineers (ASME)	https://www.asme.org

Copyright © 2025 SNIA. All rights reserved.

2.3 Conventions

The following conventions are used throughout this document:

DEFINITIONS: Certain words and terms used in this standard have a specific meaning beyond the normal English meaning. These words and terms are defined either in the definitions or in the text where they first appear.

ORDER OF PRECEDENCE: If a conflict arises between text, tables, or figures, the order of precedence to resolve the conflicts is text; then tables; and finally figures. Not all tables or figures are fully described in the text. Tables show data format and values.

LISTS: Lists sequenced by lowercase or uppercase letters show no ordering relationship between the listed items.

EXAMPLE 1 - The following list shows no relationship between the named items:

a. red (i.e., one of the following colors):
    A. crimson; or
    B. pink;
b. blue; or
c. green.

Lists sequenced by numbers show an ordering relationship between the listed items.

EXAMPLE 2 -The following list shows an ordered relationship between the named items:

1. top;
2. middle; and
3. bottom.

Lists are associated with an introductory paragraph or phrase and are numbered relative to that paragraph or phrase (i.e., all lists begin with an a. or 1. entry).

DIMENSIONING CONVENTIONS" The dimensioning conventions are described in ASME-Y14.5, Geometric Dimensioning and Tolerancing. All dimensions are in millimeters, which are the controlling dimensional units (if inches are supplied, they are for guidance only).

NUMBERING CONVENTIONS: The ISO convention of numbering is used (i.e., the thousands and higher multiples are separated by a space and a period is used as the decimal point). This is equivalent to the English/American convention of a comma and a period.

American	**French**	**ISO**
0.6	0,6	0.6
1,000	1 000	1 000
1,323,462.9	1 323 462,9	1 323 462.9

Copyright © 2025 SNIA. All rights reserved.

3. Keywords, Acronyms, and Definitions

For the purposes of this document, the following keywords, acronyms, and definitions apply.

3.1 Keywords

May: Indicates flexibility of choice with no implied preference.

May or may not: Indicates flexibility of choice with no implied preference.

Obsolete: Indicates that an item was defined in prior specifications but has been removed from this specification.

Optional: Describes features which are not required by the SFF specification. However, if any feature defined by the SFF specification is implemented, it shall be implemented as defined by the specification. Describing a feature as optional in the text is done to assist the reader.

Prohibited: Describes a feature, function, or coded value that is defined in a referenced specification to which this SFF specification makes a reference, where the use of said feature, function, or coded value is not allowed for implementations of this specification.

Reserved: Where the term is used for a signal on a connector contact, the function is set aside for future standardization. It is not available for vendor specific use. Where this term is used for bits, bytes, fields, and code values; the bits, bytes, fields, and code values are set aside for future standardization. The default value shall be zero. The originator is required to define a Reserved field or bit as zero, but the receiver should not check Reserved fields or bits for zero.

Restricted: Refers to features, bits, bytes, words, and fields that are set aside for other standardization purposes. If the context of the specification applies to the restricted designation, then the restricted bit, byte, word, or field shall be treated as a value whose definition is not in scope of this document, and is not interpreted by this specification.

Shall: Indicates a mandatory requirement. Designers are required to implement all such mandatory requirements to ensure interoperability with other products that conform to this specification.

Should: Indicates flexibility of choice with a strongly preferred alternative.

Vendor specific: Indicates something (e.g., a bit, field, code value) that is not defined by this specification. Specification of the referenced item is determined by the manufacturer and may be used differently in various implementations.

3.2 Acronyms and Abbreviations

EDSFF: Enterprise and Datacenter Standard Form Factor
NVM: Non-Volatile Memory
SSD: Solid State Drive

Copyright © 2025 SNIA. All rights reserved.

3.3 Definitions

1U: 1 Standard Unit or Rack Unit 44.45 mm (1.75 inches).

Card: Refers to the device plugged into a connector

Device: Refers to the interface target

Enclosure: The housing that protects the internal components and acts as a heat sink.

Host: Refers to the interface source or initiator

Thickness: Form factor dimension including PCB thickness, z-height of all components plus mechanicals.

Copyright © 2025 SNIA. All rights reserved.

4. General Description

4.1 Configuration Overview/Descriptions

The application environment for the 1U long form factor is a cabinet or enclosure connecting to one or more add in cards. 1U refers to 1 standard unit of an IT equipment rack and the IT enclosures that fit in this space. The device form factor is intended for use in enclosures that fit within that given space. An example use case of the 1U long form factor is to implement very high storage capacities in a 1U storage system as shown in Figure 4-1. The device connects electrically to the system through a card edge connector as defined in SFF-TA-1002. The 1U long form factor is specified including an enclosure and mounting points for a latch/front plate. The latch/front plate is beyond the scope of the specification and may add additional dimensional impact beyond what is documented. There are multiple thicknesses of the 1U long form factor depending on the max power rating.



Figure 4-1. Example system implementation of 1U long form factor.

Copyright © 2025 SNIA. All rights reserved.

5. Mechanical Specification

5.1 Overview

This section specifies the dimensions for the 1U long form factor. The dimensioning convention is per ASME-Y14.5-2009 Dimensioning and Tolerancing. For mating interface details, Datum "E" and Datum "F", refer to SFF-TA-1002. There are two thicknesses specified:

- A 9.5mm thick form factor
- An 18mm thick form factor

No part of the host chassis/guide rails of a host enclosure or parts connected to the mounting holes (e.g., a latch) should encroach into any part of the bounding volume of the device form factor dimensions and tolerances as specified in this standard when the device is inserted into the host enclosure.

For the label/Fin placement area and Dimension "B1" (Device Width), dimensions for a surface apply to a single point minimum. If a surface is not flat, the dimension applies to the highest raised location on that surface. Except for the card edge connector, each defined edge may have rounding. Labels shall be placed in the label/fin placement area. Security labels are permitted on any surface of the enclosure. Fins may be eliminated to accommodate the label, but integrity of the thermal solution should be ensured. The device supports either the 1C or 2C card edge as defined in SFF-TA-1002.

The device is responsible for sufficient light isolation between the two LEDs to prevent light bleed.

5.2 Physical Definition: 1U Long Form Factor

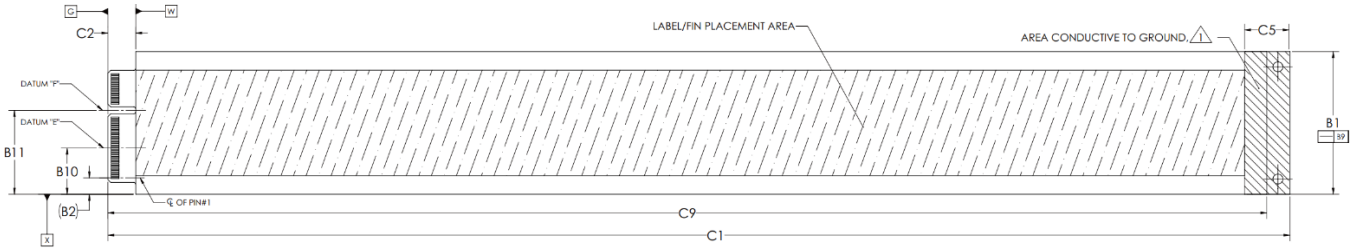

Figure 5-1. Primary Side of 1U long

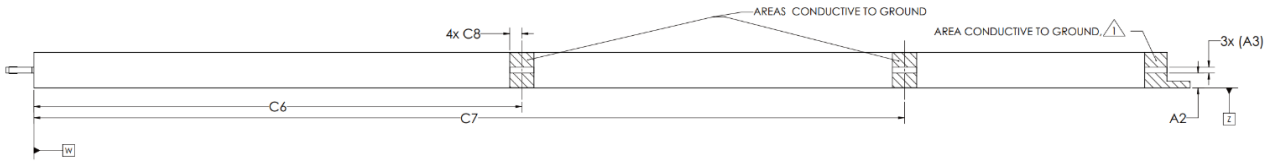

Figure 5-2. Bottom side of 1U long

Copyright © 2025 SNIA. All rights reserved.

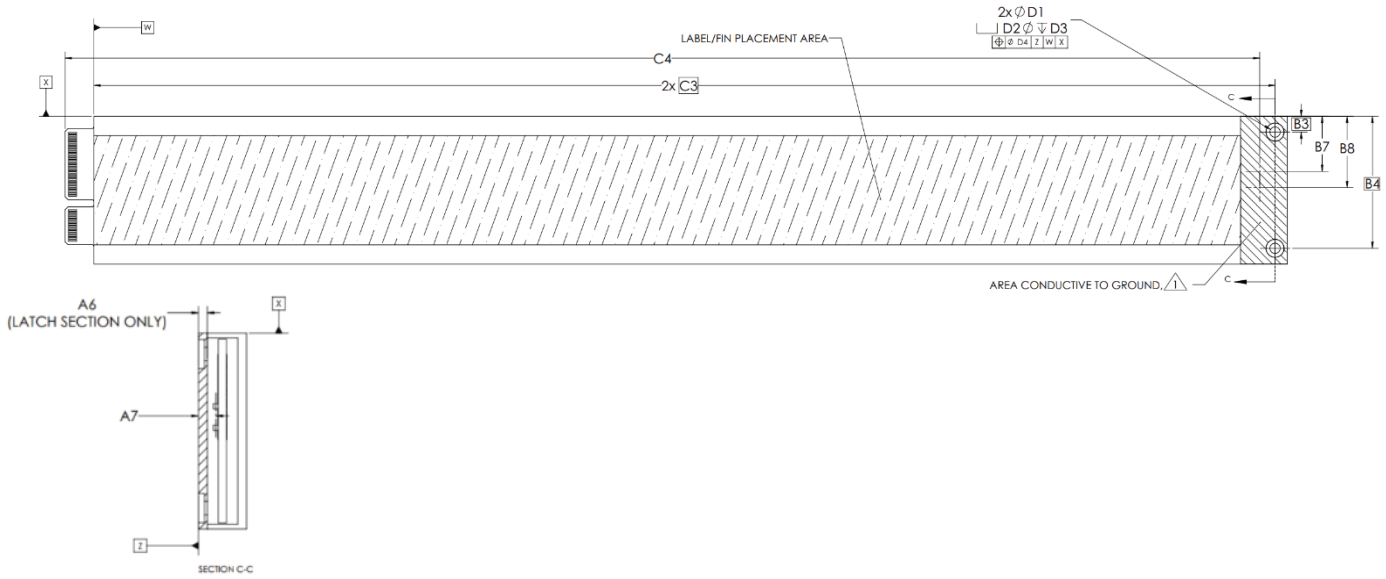

Figure 5-3. Secondary Side of 1U long and latch section



Figure 5-4. Top side of 1U long

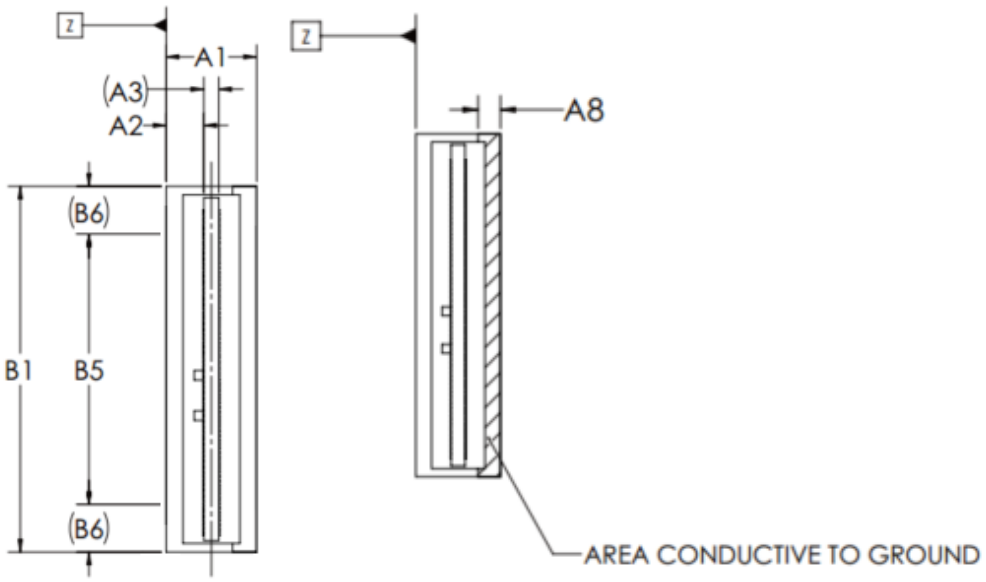

Figure 5-5. Back of 1U long (connector facing) of 9.5mm device

Copyright © 2025 SNIA. All rights reserved.

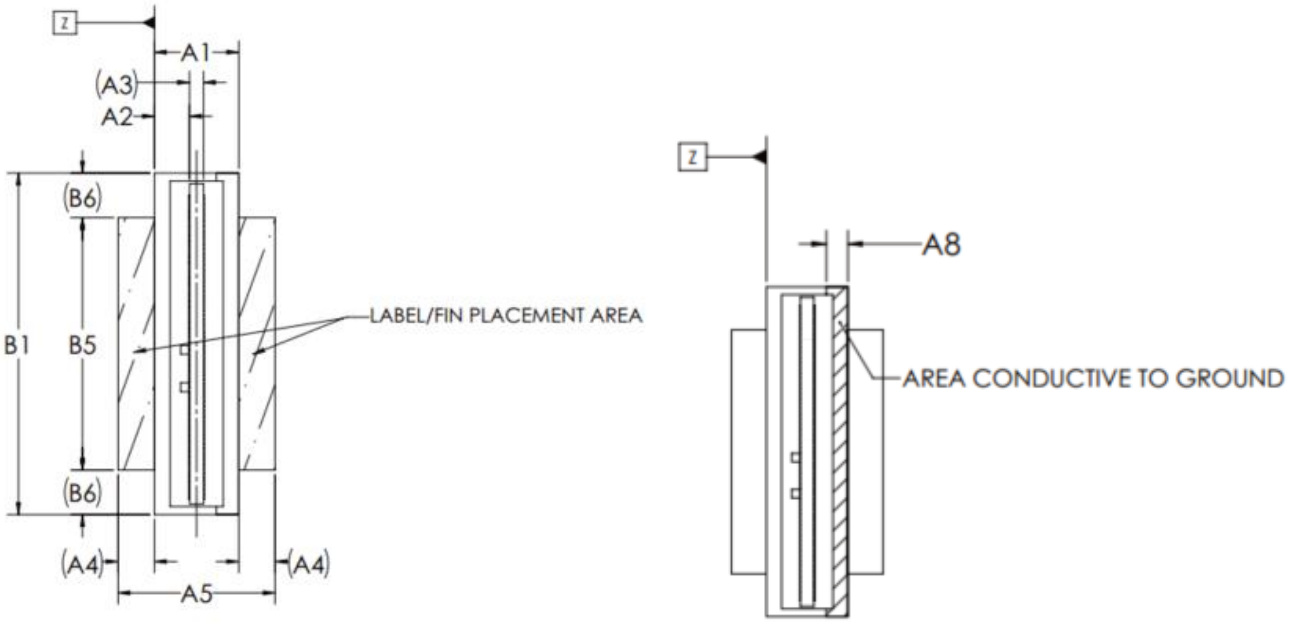

Figure 5-6. Back of 1U long (connector facing) of 18mm device

Notes:

1. Hosts should make grounding contact to at least 1 of these surfaces at the front of the device.

Copyright © 2025 SNIA. All rights reserved.

5.2.1 1U Long Form Factor

Table 5-1. 1U Long Form Factor Dimensions

Dimensions	Millimeters	Tolerance	Comment
A1	9.5	0.35	Device Thickness for 9.5 mm device
A2	3.96	0.15	PCB Card Edge location
A3	1.57	REF	PCB card edge Thickness (Ref: See SFF-TA-1002)
A4	4.25	REF	Fin height (reference)
A5	18	+0.35/-0.60	Device thickness including fins for 18 mm device
A6	2.2	0.15	Latch mounting area thickness
A7	3.46	0.50	LED center position
A8	2.35	MIN	Conductive area thickness on back of device
A9	0.4	MAX	Straightness
B1	38.4	0.25	Device width
B2	4.4	REF	Center - Connector Pin A1 location from Datum X
B3	4.1	BASIC	Mounting Hole 1
B4	34.3	BASIC	Mounting Hole 2
B5	28.4	0.25	Fin, label placement region
B6	5	REF	Host alignment structure region (reference)
B7	14.33	0.35	Attention or error (Amber) LED center position
B8	18.53	0.35	Power and activity (Green) LED center position
B9	0.4	MAX	Straightness
B10	12.415	0.35	Control dimension for x4 card edge; TA-1002 DATUM “E”
B11	22.605	0.35	Control dimension for x8 card edge; TA-1002 DATUM “F”
C1	318.75	0.55	Device length
C2	7.5	0.25	Card edge length
C3	308	BASIC	Mounting Hole 1 and 2
C4	311.05	0.45	LED edge closest to latch area
C5	12	MIN	Minimum Conductive area length
C6	131.3	0.15	Bottom conductive area 1
C7	234.3	0.15	Bottom conductive area 2
C8	3.2	MIN	Bottom conductive area length
C9	312.5	+0.15/-0.95	Datum G to latch area keep out zone
D1	2.7	0.15	
D2	4.7	0.15	
D3	1.2	0.1	
D4	0.25	MAX	Position Tolerance

Copyright © 2025 SNIA. All rights reserved.

6. Informative: SFF-TA-1002 edge (plug) Mechanical drawing

6.1 Overview

This section shows the card edge mechanical drawing for convenience only. See SFF-TA-1002 for normative and performance requirements.

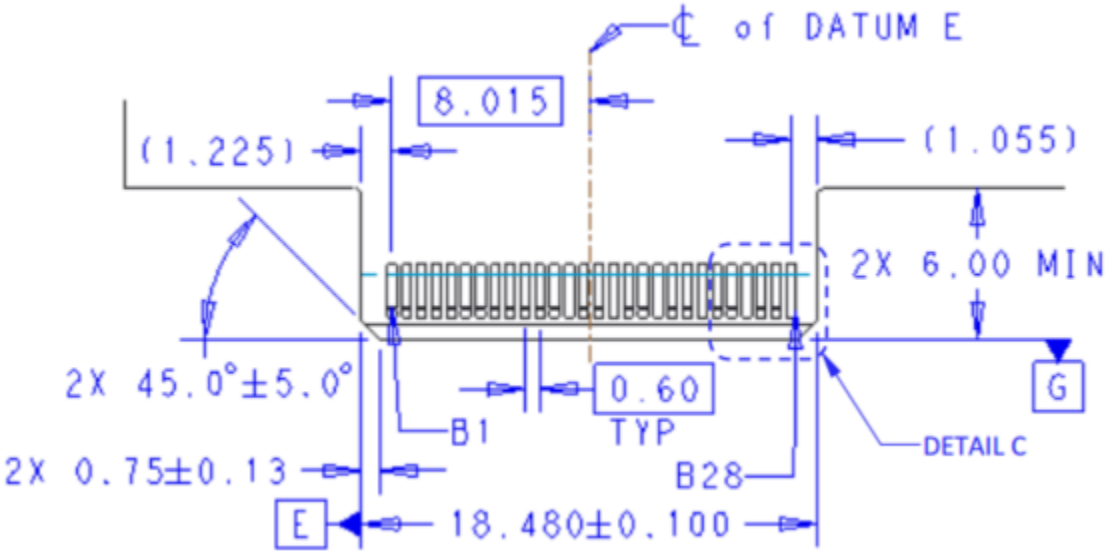

Note: Position A1 on opposite side of card of B1

Figure 6-1. 1C (x4) Mating Card Dimensions

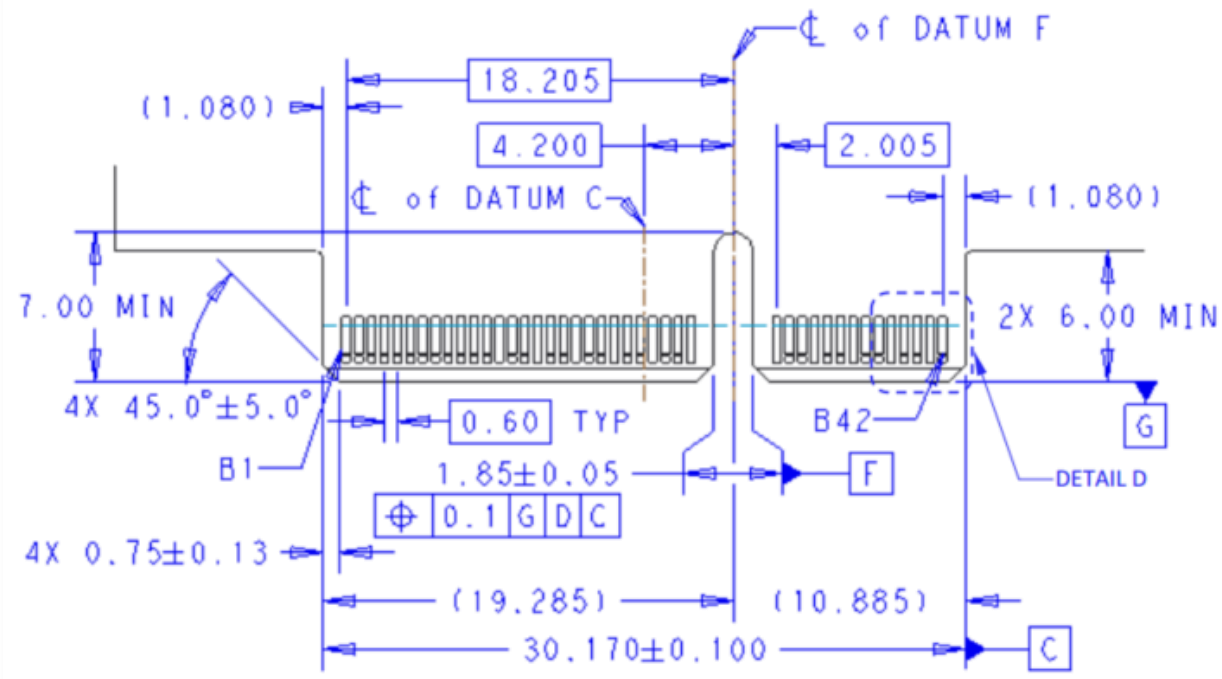

Note: Position A1 on opposite side of card of B1

Figure 6-2. 2C (x8) Mating Card Dimensions

Copyright © 2025 SNIA. All rights reserved.

7. E1.L Power/Thermal Requirements

The following section covers the power and thermal requirements of the device.

7.1 Power

Power constraints for this device form factor are summarized in Table 7-1. For more information, refer to SFF-TA-1009 *Enterprise and Datacenter Standard Form Factor Pin and Signal Specification*.

Table 7-1. Power Requirements for a 1U long (E1.L) system implementation

Parameter	E1.L	Comment
Initial Slot Power Limit (12Vpinit)	25 W	Refer to SFF-TA-1009 for definitions and additional details.
Maximum device power capability	Up to 79.2 W at 12 V	Limited by the current capability of SFF-TA-1002

7.2 Thermals

For detailed device thermal requirements, refer to SFF-TA-1023 *Thermal Specification for EDSFF Devices*.

7.3 Informative: Maximum Sustained Device Power

There is no specified maximum sustained power for this device apart from the connector limits. The connector is defined to supply a maximum sustained current of 6.6 A which at 12 V nominal limits the form factor to 79.2 W of power. This value, however, is further limited by the operating environment of the host and device. The host manufacturer should provide their requirements and communicate this value as defined by the 12Vpsus definition in SFF-TA-1009 *Enterprise and Datacenter Standard Form Factor Pin and Signal Specification*.

Copyright © 2025 SNIA. All rights reserved.